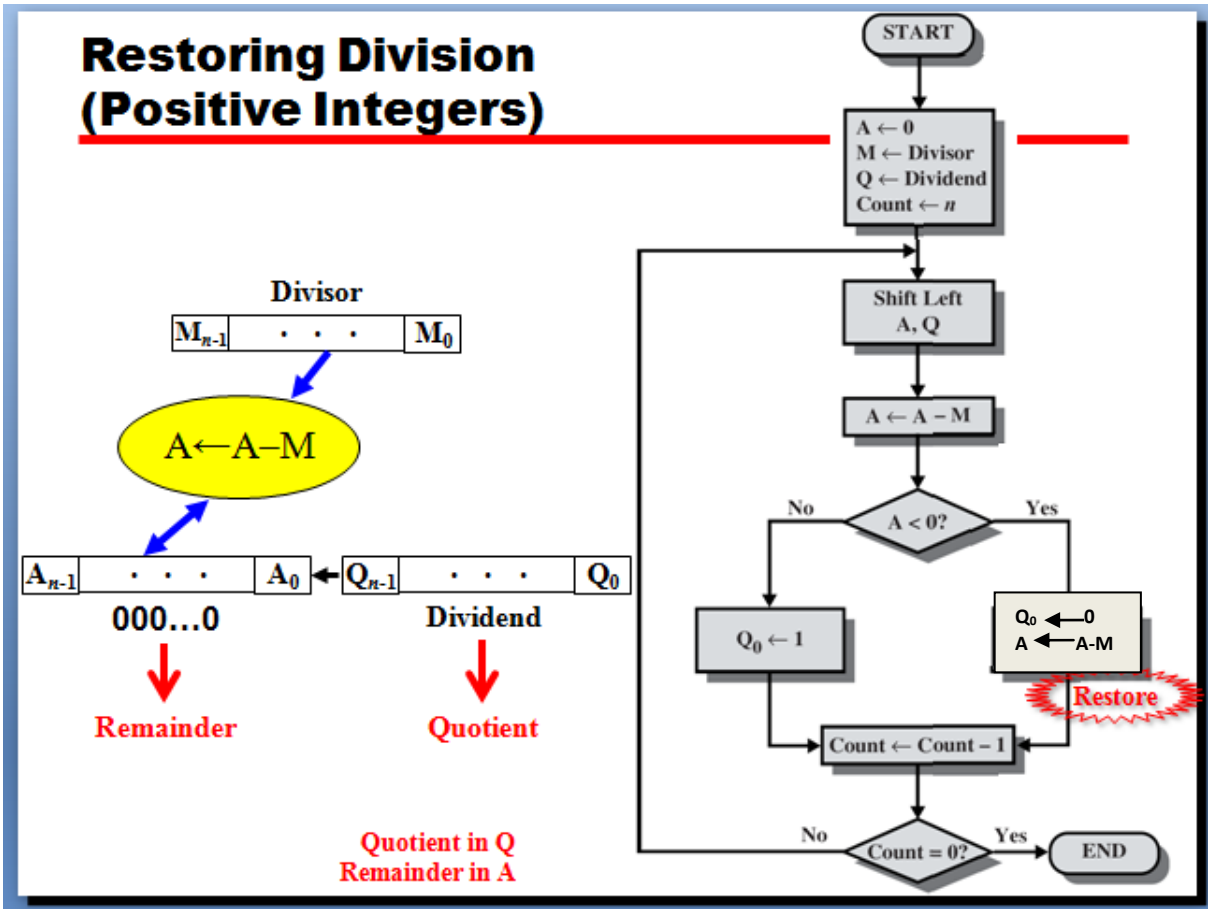
Restoring Division
(Positive Integers)
START
A ← 0
M ← Divisor
Q ← Dividend
Count ← n
Shift Left
A, Q
A ← A – M
A < 0?
No
Yes
Q0 ← 1
Q0 ← 0
A ← A-M
Restore
Count ← Count – 1
Count = 0?
No
Yes
END
Divisor
Mn-1
M0
A←A–M
An-1
A0
Qn-1
Q0
000…0
Dividend
Remainder
Quotient
Quotient in Q
Remainder in A

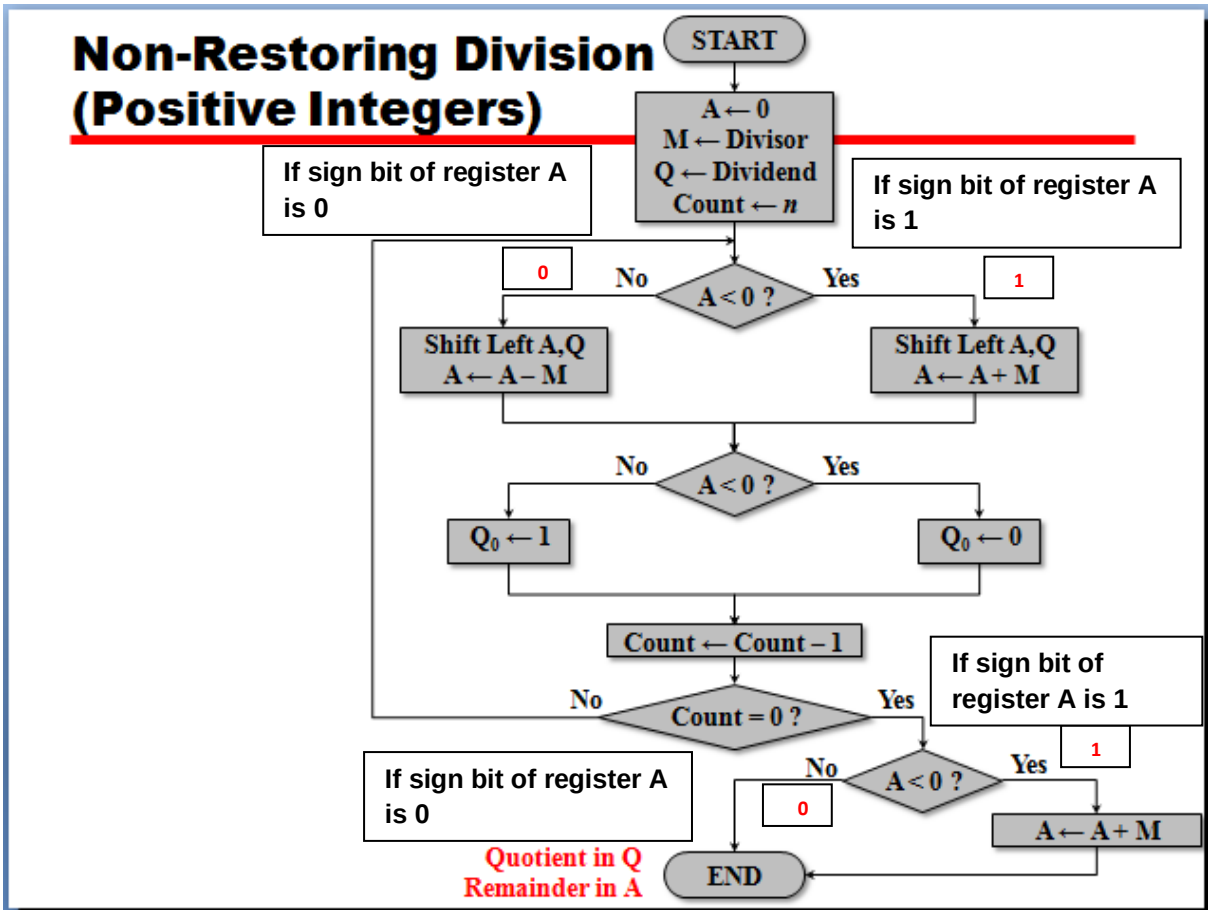
Non-Restoring Division
(Positive Integers)
START
A ← 0
M ← Divisor
Q ← Dividend
Count ← n
If sign bit of register A is 0
If sign bit of register A is 1
0
No
A < 0 ?
Yes
1
Shift Left A,Q
A ← A – M
Shift Left A,Q
A ← A + M
No
A < 0 ?
Yes
Q0 ← 1
Q0 ← 0
Count ← Count – 1
No
Count = 0 ?
Yes
If sign bit of register A is 1
1
No
A < 0 ?
Yes
If sign bit of register A is 0
0
A ← A + M
Quotient in Q
Remainder in A
END

Non-Restoring Division Algorithm For Unsigned Integer

Algorithm

Non-Restoring Division Algorithm For Unsigned Integer Steps	
Step-1:	Initialize registers Q = Dividend, M = Divisor, A = 0, n = number of bits in dividend
Step-2:	If sign bit of register A is 1 then shift left content of AQ and A=A+M, otherwise shift left content of AQ and A=A-M (means add 2's complement of M to A and store it to A)
Step-3:	If sign bit of register A is 1 then Q[0]=0 otherwise Q[0]=1 (Q[0] means LSB (least significant bit) of Q)
Step-4:	The value of counter n is decremented by 1
Step-5:	If value of n becomes 0 then go to next step otherwise repeat from step-2
Step-6:	If sign bit of register A is 1 then A=A+M
Step-7:	Now register Q contains Quotient value and A contains Remainder value

Find 13 divided by 4 using Non-restoring Division Algorithm For Unsigned Integer
Solution:
Dividend = 13
Divisor = 4
First the registers are initialized with corresponding values (Q = Dividend, M = Divisor, A = 0, n = number of bits in dividend)

n	**M**	**A**	**Q**	**Operation**
4	00100	00000	1101	initialize
4	00100	00001	101_	shift left AQ
		11101	101_	A=A-M
		11101	1010	Q[0]=0
3	00100	11011	010_	shift left AQ
		11111	010_	A=A+M
		11111	0100	Q[0]=0
2	00100	11110	100_	shift left AQ
		00010	100_	A=A+M
		00010	1001	Q[0]=1
1	00100	00101	001_	shift left AQ
		00001	001_	A=A-M
		00001	0011	Q[0]=1

register Q contain the quotient 3 and register A contain remainder 1

Integer Division

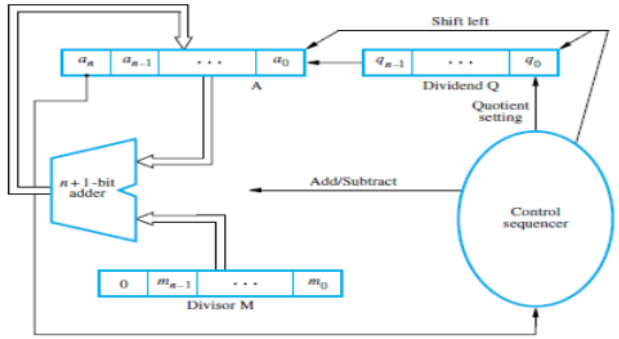

Figure 9.23 Circuit arrangement for binary division.

Find 8 divided by 3 using Restoring and Non-restoring Division Algorithm For Unsigned Integer

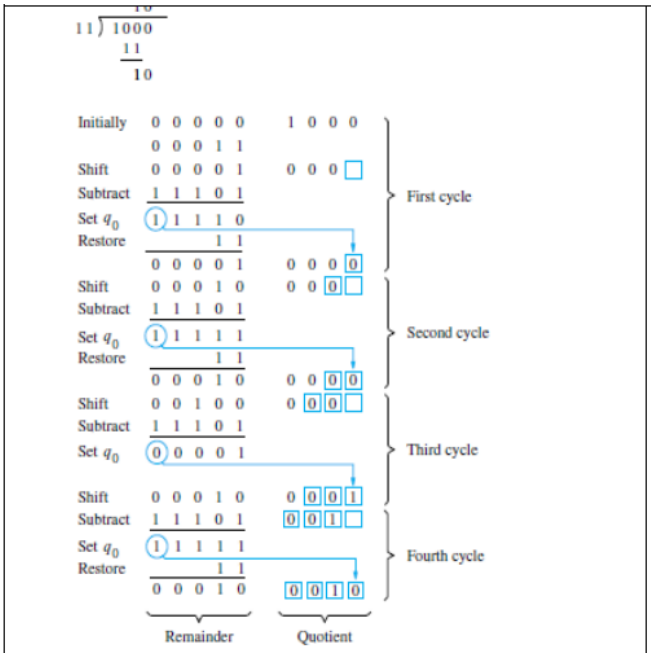

Restoring Division

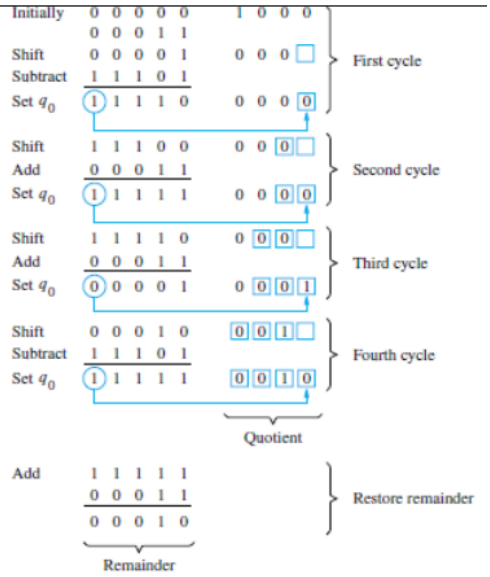

Figure 9.25 A non-restoring division example.

Non restoring division